RPI Nuttall flexeserve Zone®

PROJECT: _____

ITEM: _____ **QUANTITY:** _____

3-TIER HOT DISPLAY

SPECIFICATIONS

Patented technology is designed to allow hot air convection, which enables the individual zones to be controlled, maintaining the quality of the product.
The innovative technology of Flexeserve Zone® gives the versatility of tailoring the hot food offerings, reducing product waste from the ability to turn zones on or off predicated upon the time of day and customer demands!

Available lengths: ☐ *14”* ☐ *22”* ☐ *38 3/8”*

Available depths: ☐ *34 1/2” ***

Available heights: ☐ *60 1/4” ****** ☐ *60”*

** DEPTH INCLUDES 2” REMOVABLE REAR BUMPERS

STANDARD FEATURES

- ■ *Individually controlled temperature zones*
- ■ *Energy efficient LED lighting to all zones*
- ■ *Stainless steel interior*
- ■ *Fan Guard Included (one per zone)*
- ■ *#4 Stainless Steel Exterior Top Fascia & Front Valance*
- ■ *Double glazed end panels*
- ■ *Curved canopy*
- ■ *Heat proof ticket edge*
- ■ *2” Rear Bumpers (removable)*
- ■ *Stabalization Plates (14 Inch Unit Only)*
- ■ *(4) 1 1/8” Casters (14” Units contain 4 3/8” Casters)*

OPTIONAL FEATURES

- ☐ *#8 Mirrored polished stainless steel for **top fascia*** and **lower valance***
- ☐ *Exterior standard colors for top fascia and lower valance (See RPI Color Chart)*
- ☐ *Exterior custom colors for top fascia and lower valance (Consult factory)*
- ☐ *Exterior with custom graphics package (Consult factory)*
- ☐ *Night Blind*

MARKETING ACCESSORIES

- ☐ *Angled Merchandising Insert (Order 1 to fill the shelf, 2 for FXZNA10N2S)*
- ☐ *Merchandising Divider (Recommended for use with*
- ☐ *Angled Inserts)*
- ☐ *Merchandising Tray*
  - ☐ *FXZNA40N3S (1 to fill the shelf)*
  - ☐ *FXZNA60N3S (2 to fill the shelf)*
  - ☐ *FXZNA10N3S (4 to fill the shelf)*
- ☐ *Merchandising Rack - Narrow (Recommended for use with Merchandising Trays)*
- ☐ *Merchandising Rack - Standard(Recommended for use with Merchandising Trays)*
- ☐ *Black Metal Condiment Basket (hangs from ticket edge)*
- ☐ *Acrylic Condiment Basket (Recommended hang from riser)*
- ☐ *Variety box of recommended packaging samples*

CALL TOLL FREE: 800-525-3692 (609-714-2330)
FAX: 609-714-2331 www.rpiindustries.com
220 ROUTE 70, MEDFORD, NJ 08055

RPI INDUSTRIES, INC. *v9_17_19*

RPI Nuttall flexeserve Zone®

PROJECT: _____

TOLL FREE: 800-525-3692

3-TIER HOT DISPLAY

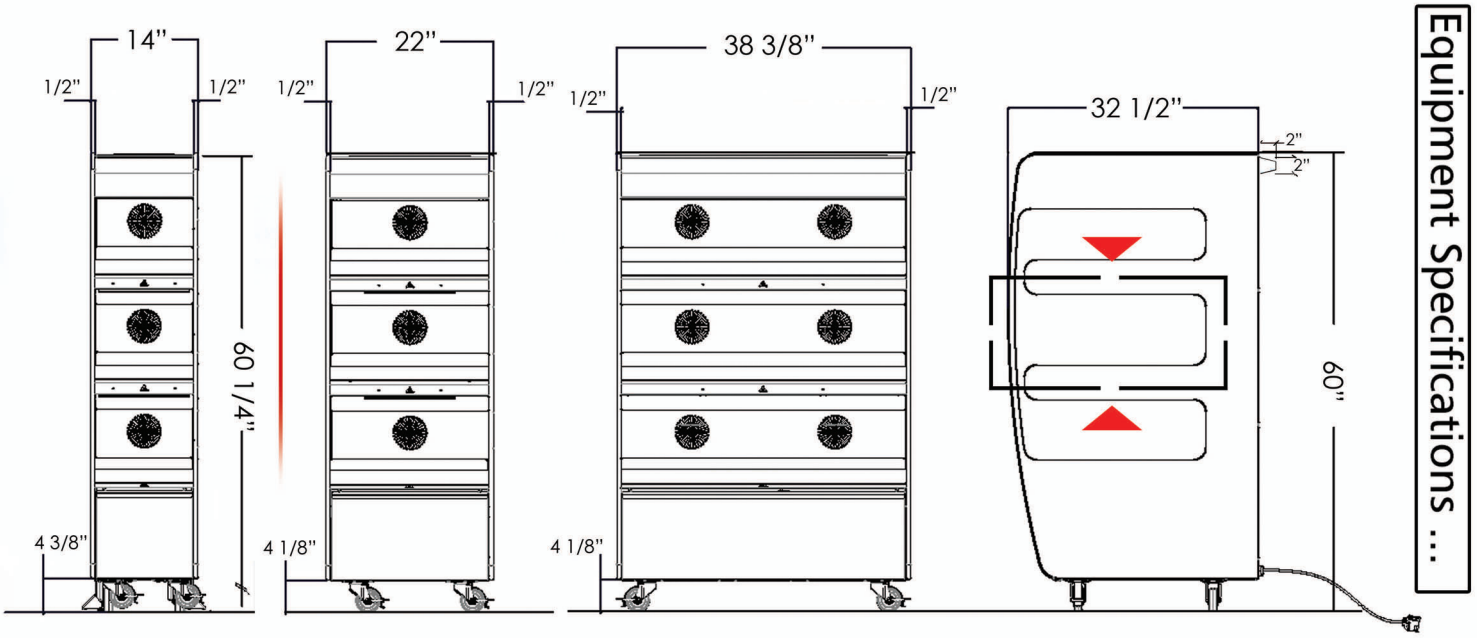

Equipment Specifications ...

FXZNA40S3C **FXZNA60S3C** **FXZNA10S3C**

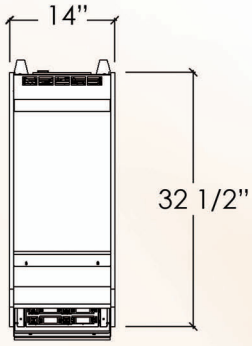

PLUG CONFIGURATION

6-15P **6-30P**

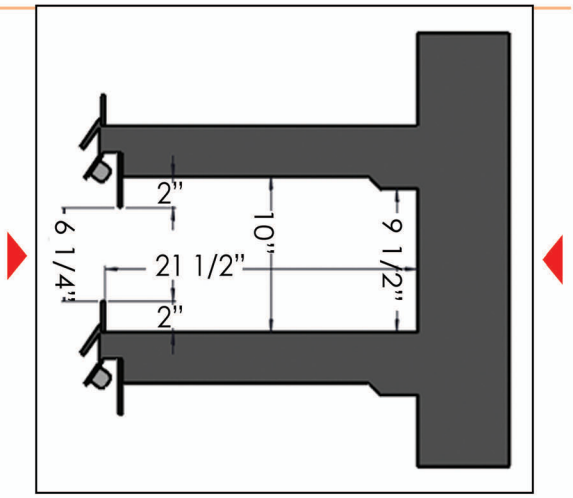

INTERIOR SHELF DEPTH

MODEL	L	D	H	VOLT	AMP	PLUG	WT
FXZNA40S3C ***	14"	34 1/2"	60 1/4"	SINGLE PHASE 208/230	10.7	6-15P	291
FXZNA60S3C	22"	34 1/2"	60"	SINGLE PHASE 208/230	10.7	6-15P	379
FXZNA10S3C	38 3/8"	34 1/2"	60"	SINGLE PHASE 208/230	21.5	6-30P	507

*** FXZNA40S3C REQUIRES STABALIZATION PLATES / UNIT IS 1/4" TALLER

USA Patent Number - 9,462,897 B2

Conforms to UL Standard 197, and NSF Standard 4; Certified To CSA Standard C22.2 No.109

RPI in line with its policy to continually improve its products reserves the right to change materials and specifications without notice.

CALL TOLL FREE: 800-525-3692 (609-714-2330)
FAX: 609-714-2331 www.rpiindustries.com
220 ROUTE 70, MEDFORD, NJ 08055

RPI INDUSTRIES, INC. v9_17_19